SAN DIEGO BIOMEDICAL RESEARCH INSTITUTE
Duke UNIVERSITY

Poly/autoreactivity And Broad Neutralization Are not Affected by same Mutations

0263

Xiaojun Li[1], Dongmei Liao[2], Zhengyang Li[3], Shobhit Srivastava[1], Jixi Li[3], Laurent Verkoczy[4], Feng Gao[1]

Department of Medicine[1] and Immunology[2], Duke University Medical Center, Durham, NC 27710, USA. [3]School of Life Sciences, Fudan University, Shanghai, 200438, China. [4]San Diego Biomedical Research Institute, San Diego, CA 92121, USA

BACKGROUND

Nearly half of broadly neutralizing antibodies (bnAbs) are polyreactive and/or autoreactive (poly/autoreactive). Some of them, like CH103, gain poly/autoreactivity during bnAb maturation. However, whether poly/autoreactivity and broad neutralization are governed by the same mutations during bnAb maturation is not well understood.

METHODS

Mutations in Ab pairs differing in poly/autoreactivity within the CH103 lineage were individually introduced into the Abs with weak or no poly/autoreactivity in each of three Ab pairs (IA2 and IA1, IA3 and IA1, as well as CH103 and CH106 Abs). Recombinant Abs were expressed and purified from transfected Expi293 cells. Neutralization activity against HIV-1 was determined on the TZM-bl cells. Poly/autoreactivity was analyzed by their ability to bind HEp-2 cells, host proteins or nuclear acids.

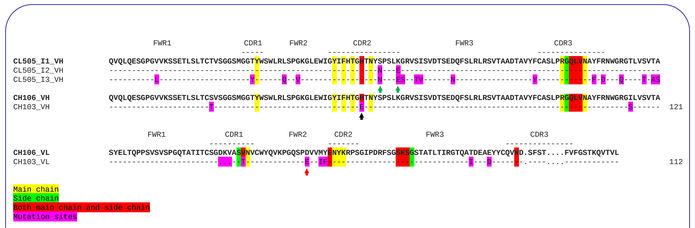

Figure 1. Amino acid alignment of heavy and light chains of CH103 clonal lineage members.

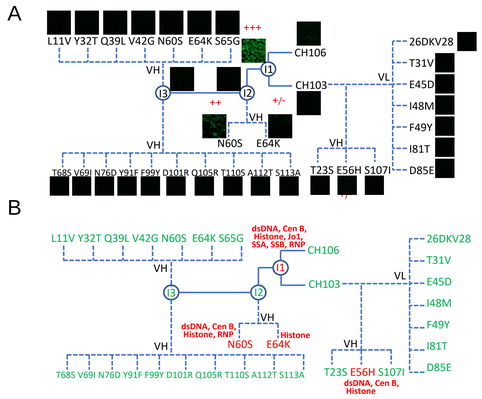

Figure 2. Poly/autoreactivity analysis of antibodies in the CH103 clonal lineage and mutants by Hep-2 staining (A) and ANA assays (B).

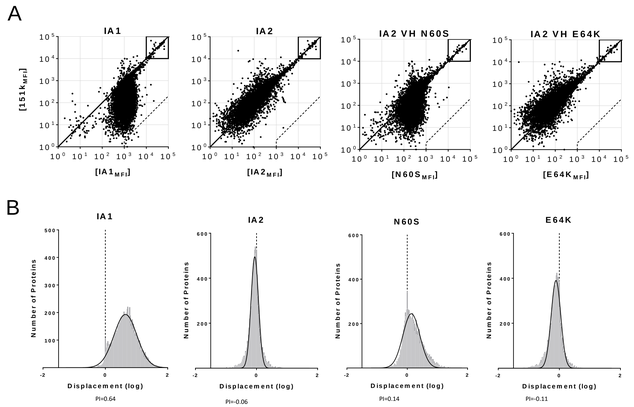

Figure 3. Poly/autoreactivity analysis of antibodies in the CH103 clonal lineage and mutants by protein array microchip analysis

RESULTS

- No mutations had significant effects on neutralization susceptibility.
- The N60S and E56H mutations in variable heavy (V_H) chain rendered IA2 and CH103, respectively, reactive o HEp-2 and host proteins and dsDNA, while the VH E64K mutation rendered IA2 reactive only to histone.
- Protein array analysis using ~9000 human proteins showed that the IA2 with the N60S mutant was poly/autoreactive, while the E64K mutation did not have effect on poly/autoreactivity of IA2
- The V_H E64K mutation in IA2 and IA3 as well as the V_H E56H and VL E45D mutations in CH103 increased their reactivity to UBE3A.
- Structure modeling indicated that all mutations were in VH CDR2 or upstream of VL CDR2, not at sites contacting HIV-1 Env. Thus, they were not expected to affect binding to HIV-1 Env. However, amino acid charge changes in these regions may play an important role in increased poly/autoreactivity.

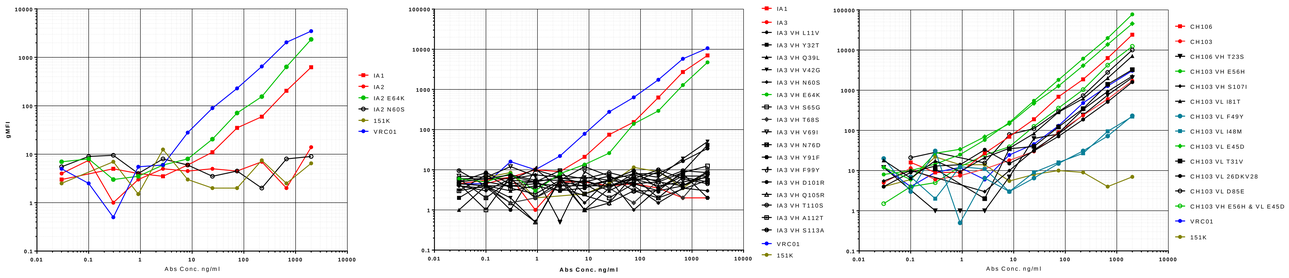

Figure 4. UBE3A binding by CH103 clonal lineage members and mutants

Table 1. Neutralization activity of CH103 clonal lineage mAbs and mutants against 15 Env-pseudoviruses.

Virus ID	Clade	I1 WT	I2 WT	I2 VH N60S	I2 VH E64K	I3 WT	I3 VH L11V	I3 VH Y32T	I3 VH Q39L	I3 VH V42G	I3 VH N60S	I3 VH E64K	I3 VH S65G	I3 VH T68S	I3 VH V69I	I3 VH N76D	I3 VH Y91F	I3 VH F99Y	I3 VH D101R	I3 VH Q105R	I3 VH T110S	I3 VH A112T	I3 VH S113A	CH106 WT	CH103 WT	CH103 VH T23S	CH103 VH E56H	CH103 VH S107I	CH103 VL 26DKV28	CH103 VL T31V	CH103 VL E45D	CH103 VL I48M	CH103 VL F49Y	CH103 VL I81T	CH103 VL D85E	CH103 VH E56H& VL E45D
Q842.D16-Q23	A	7.39	13.65	5.49	33.04	41.55	>50.00	>50.00	>50.00	33.09	>50.00	>50.00	>50.00	>50.00	>50.00	49.59	>50.00	>50.00	>50.00	>50.00	>50.00	>50.00	>50.00	5.79	1.85	1.62	7.07	3.35	5.55	5.35	1.55	2.58	2.98	3.18	2.81	9.44
398F1-Q23	A	>50.00	>50.00	>50.00	>50.00	>50.00	>50.00	>50.00	>50.00	>50.00	>50.00	>50.00	>50.00	>50.00	>50.00	>50.00	>50.00	>50.00	>50.00	>50.00	>50.00	>50.00	>50.00	>50.00	>50.00	45.56	>50.00	35.56	>50.00	>50.00	9.23	21.65	45.39	47.52	30.01	>50.00
CNE55-Q23	AE	>50.00	>50.00	>50.00	>50.00	>50.00	>50.00	>50.00	>50.00	>50.00	>50.00	>50.00	>50.00	>50.00	>50.00	>50.00	>50.00	>50.00	>50.00	>50.00	>50.00	>50.00	>50.00	>50.00	>50.00	>50.00	>50.00	>50.00	>50.00	>50.00	>50.00	>50.00	>50.00	>50.00	>50.00	>50.00
CNE8-Q23	AE	>50.00	>50.00	>50.00	>50.00	>50.00	>50.00	>50.00	>50.00	>50.00	>50.00	>50.00	>50.00	>50.00	>50.00	>50.00	>50.00	>50.00	>50.00	>50.00	>50.00	>50.00	>50.00	>50.00	>50.00	>50.00	>50.00	>50.00	>50.00	>50.00	>50.00	>50.00	>50.00	>50.00	>50.00	>50.00
TRO11-Q23	B	19.95	23.07	16.15	35.03	>50.00	>50.00	>50.00	>50.00	>50.00	>50.00	>50.00	>50.00	>50.00	>50.00	>50.00	>50.00	>50.00	>50.00	>50.00	>50.00	>50.00	>50.00	14.05	6.35	4.86	5.58	8.71	10.92	10.27	7.63	6.42	8.07	7.87	6.61	9.06
X2278-Q23	B	2	1.7	2.48	3.25	44.75	>50.00	>50.00	>50.00	48.53	>50.00	>50.00	>50.00	>50.00	>50.00	29.67	>50.00	>50.00	27.47	>50.00	>50.00	>50.00	>50.00	0.94	4.77	4.26	0.84	4.49	20.51	18.23	3.06	4.2	5.05	4.34	3.61	1.35
BJOX00200-Q23	BC	47.85	41.8	34.17	>50.00	>50.00	>50.00	>50.00	>50.00	>50.00	>50.00	>50.00	>50.00	>50.00	>50.00	>50.00	>50.00	>50.00	>50.00	>50.00	>50.00	>50.00	>50.00	>50.00	24.34	18.15	19.38	18.11	23.61	26.57	18.03	21.51	24.05	25.03	21.43	32.42
CH119-Q23	BC	>50.00	>50.00	>50.00	>50.00	>50.00	>50.00	>50.00	>50.00	>50.00	>50.00	>50.00	>50.00	>50.00	>50.00	>50.00	>50.00	>50.00	>50.00	>50.00	>50.00	>50.00	>50.00	>50.00	>50.00	>50.00	>50.00	>50.00	>50.00	>50.00	>50.00	>50.00	>50.00	>50.00	44.84	>50.00
Ce1176-Q23	C	>50.00	>50.00	>50.00	>50.00	>50.00	>50.00	>50.00	>50.00	>50.00	>50.00	>50.00	>50.00	>50.00	>50.00	>50.00	>50.00	>50.00	>50.00	>50.00	>50.00	>50.00	>50.00	>50.00	>50.00	>50.00	>50.00	>50.00	>50.00	>50.00	>50.00	>50.00	>50.00	>50.00	>50.00	>50.00
Ce0217-Q23	C	46.64	>50.00	>50.00	>50.00	>50.00	>50.00	>50.00	>50.00	>50.00	>50.00	>50.00	>50.00	>50.00	>50.00	>50.00	>50.00	>50.00	>50.00	>50.00	>50.00	>50.00	>50.00	>50.00	28.95	26.65	40.64	20.19	24.77	27.27	25.15	24.93	27.93	30.05	24.58	>50.00
25710-Q23	C	>50.00	>50.00	>50.00	>50.00	>50.00	>50.00	>50.00	>50.00	>50.00	>50.00	>50.00	>50.00	>50.00	>50.00	>50.00	>50.00	>50.00	>50.00	>50.00	>50.00	>50.00	>50.00	>50.00	>50.00	>50.00	>50.00	>50.00	>50.00	>50.00	>50.00	>50.00	>50.00	>50.00	>50.00	>50.00
DQ435.100M.A1-Q23	D	9.52	11.73	10.11	14.47	>50.00	>50.00	>50.00	>50.00	>50.00	>50.00	>50.00	>50.00	>50.00	>50.00	>50.00	>50.00	>50.00	35.91	>50.00	>50.00	>50.00	>50.00	6.31	14.01	11.2	5.86	12.35	14.82	16.12	12.45	11.33	11.39	12.93	11.6	2.44
X1632-Q23	G	20.2	33.91	23.2	>50.00	>50.00	>50.00	>50.00	>50.00	>50.00	>50.00	>50.00	>50.00	>50.00	>50.00	>50.00	>50.00	>50.00	>50.00	>50.00	>50.00	>50.00	>50.00	24.23	8.37	2.82	18.57	4.09	9.32	8.6	1.77	3.66	4.12	4.12	3.7	14.89
SF162.LS	B	0.18	0.11	0.35	0.27	0.47	0.76	0.47	0.47	0.49	0.42	0.9	0.89	0.74	0.81	0.59	0.72	1.05	0.45	0.84	0.49	0.5	0.73	0.06	0.29	0.29	0.11	0.27	0.5	0.67	0.34	0.29	0.25	0.31	0.33	0.08
SS1196.1	B	0.39	0.53	0.39	0.31	2.18	1.43	1.29	0.91	0.96	1.27	1.4	1.7	1.1	1.47	0.91	1.82	1.69	0.85	1.1	1.33	1.62	1.43	0.24	1.05	0.73	0.26	1.05	1.31	1.18	0.6	1.25	1.16	1.32	1.16	0.51
Breadth	N=15 Titer < 50	60	53	53	46	27	13	13	13	27	13	13	13	13	13	27	13	13	27	13	13	13	13	47	60	67	60	67	60	60	67	67	67	67	73	53
Geometric Mean		5.916	5.181	4.706	4.072	6.607	1.042	0.779	0.654	5.243	0.730	1.122	1.230	0.902	1.091	5.302	1.145	1.332	4.407	0.961	0.807	0.900	1.022	2.167	4.359	4.671	3.512	5.479	7.390	7.548	3.831	5.110	5.892	6.205	6.433	2.938

0.01-1.0 | 1.0-10.0 | 10.0-50.0 | >50

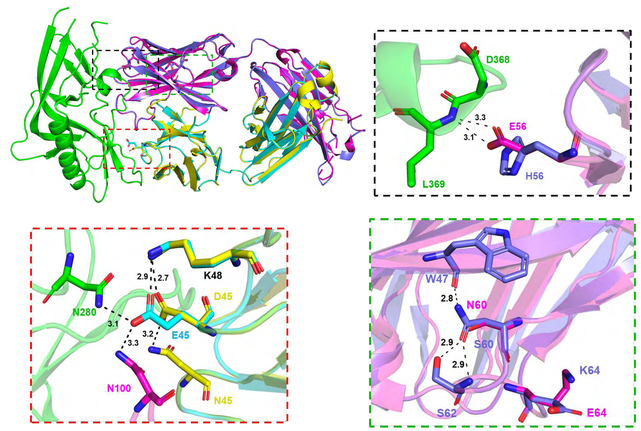

Figure 5. Structural modeling of mutations in CH103

CONCLUSIONS

Development of poly/autoreactivity during maturation of the bnAb CH103 lineage is governed by a few somatic mutations that have no impact on neutralization breadth. The charge changes in the CDR2 regions of VH and VL chains may play an important role in increased poly/autoreactivity.