P648

Outcome of 215 HCV/HIV-Coinfected Liver Transplant Recipients: A Prospective Multicenter Study

Jose M. Miro
Hosp. Clinic-IDIBAPS, Univ. Barcelona. Barcelona (Spain)
jmmiro@ub.edu

Jose M. Miro[1], Miguel Montejo[2], Marino Blanes[3], Manuel abradelo[4], Santos del Campo[5], Lluis Castells[6], Antoni Rafecas[7], Christian Manzardo[1]*, Iñaki Perez[1], Antoni Rimola[1], and FIPSE Investigators

1, Hospital Clinic-IDIBAPS, University of Barcelona, Barcelona, Spain 2, Hospital Universitario de Cruces, Bilbao, Spain , 3, Hospital la Fe, Infectious Diseases, Valencia, Spain , 4 Hospital Doce de Octubre, Madrid, Spain , 5 Hospital Universitario Ramon y Cajal, Madrid, Spain , 6, Hospital Universitario Vall d'Hebrón, Barcelona, Spain , 7Hospital Bellvitge- IDIBELL, University of Barcelona, L'Hospitalet de Llobregat, Spain .

Abstract

Background: We compared the survival after liver transplantation (LT) between HCV/HIVcoinfected patients and HCV-monoinfected patients. We also identified prognostic factors in HCV/HIV-coinfected LT recipients.
Methodology: Consecutive 215 HCV/HIV-coinfected patients who underwent LT between 2002 and 2012 and followed until June 2013 at 22 Spanish centers were matched with 613 HCV-monoinfected patients who received LT during the same period at the same institutions. Other matched criteria were age (±10 years), gender, HBV infection, and hepatocellular carcinoma. All patients had serum HCV RNA positive at LT.
Results: A total of 90 (42%) HCV/HIV-coinfected and 184 (30%) HCV-monoinfected recipients died during a median (IQR) follow-up of 3 (1-6) years. Retransplantation was performed in 11 (5%) and 43 (7%) patients, respectively. Survival at 1, 3, and 5 years for HCV/HIV-coinfected and HCVmonoinfected patients, according to the different HCV genotypes, is shown in the table. Five-year survival for HCV genotype 1 in HIV-infected recipients was 40% (29-51) in comparison with 68% (63-73) for HIV-negative recipients (P<0.001). Survival rates for genotypes 2 and 3 were excellent and similar in both groups (P=0.172). In HCV/HIV-coinfected recipients, pre-transplant predictive factors of post-transplant survival (HR, 95% CI) were: HCV genotype 1 (1.94 [1.19-3.14]), MELD score (per unit increase; 1.14 [1.00-1.07]), site LT volume (>1 case/year; 0.58 [0.37-0.94]), HCV viral load (>400,000 units/mL; 1.62 [1.03-2.57]), and plasma HIV suppression on cART (0.47 [0.24- 0.90]). Anti-HCV treatment with pegylated-interferon plus ribavirin was administered in 42% of recipients in each group, and sustained virological response (SVR) was achieved in 22% of HCV/HIV-coinfected patients and 37% of HCV-monoinfected patients (P<0.01). In patients with SVR, 5-year survival after anti-HCV therapy was 84% and 97%, respectively (P=0.139).
Conclusions: 1) LT is a valid option for HCV/HIV-coinfected patients with genotypes 2 and 3, but more challenging for patients with genotypes 1 and 4; however, survival greatly improves in patients with SVR to anti-HCV therapy. The new available direct-acting antiviral agents (DAA) will improve the post-LT rates of SVR and therefore the outcome of coinfected recipients with genotypes 1 and 4; 2) Plasma HIV viral load should be suppressed before LT; and, 3) LT in HCV/HIV coinfected patients should be performed at selected sites.

Background

-Increasing need and performance of liver transplantation (LT) in HIV-infected patients worldwide.

- Good long-term post-LT results in non-HCV-infected patients

-Recent studies involving large series in HCV/HIV coinfected LT recipients showed an acceptable (50-55% at 5 years) but lower mid-term results than in HCV mono-infected LT recipients[1,2].

- However, these studies have included patients who cleared the virus before LT and were not powered to analyzed outcomes according to the HCV genotypes.

Objectives

1. To compare the post-LT survival between 215 HCV/HIV co-infected patients and 613 HCV mono-infected patients who had HCV replication at time of LT.

2. To identify prognostic factors in HCV/HIV co-infected patients.

Methods

Case-control (1:3) Study

N= 255 HCV/HIV co-infected patients
51 variables investigated as predictors for post-LT mortality

Pre-LT recipient data:
- Demographics
- Liver disease
- HCV infection & Rx
- HIV infection & cART

Peri-LT data:
- Donor characteristics
- Year of OLT
- Center
- Transfusion

Post-LT data:
- Immunosuppression
- Rejection
- HCV infection
- Hepatitis C recurrence & Rx
- HIV infection & cART
- Technical complications
- Infectious complications

N = 765 (3:1 HCV/HIV co-infected) HCV mono-infected LT recipients:

Selected from Spanish national (SETH) database

Matching Criteria:

1. Center where LT was performed; 2. Year of LT (±1 year); 3. Age (±12 years); 4. Gender; 4. HBV co-infection; 4. Hepatocellular carcinoma.

Statistical analysis:

Survival in HCV/HIV co-infected and HCV mono- infected patients:
1. Kaplan-Meier estimates; 2. Log rank test

Predictors of mortality in HCV/HIV co-infected patients:

1. Bivariate analyses: Cox regression; 2. Multivariate analyses: Variables with p < 0.10 in bivariate analysis → Cox regression.

Results

Figure 1. Selection Flow-Charts for the Study

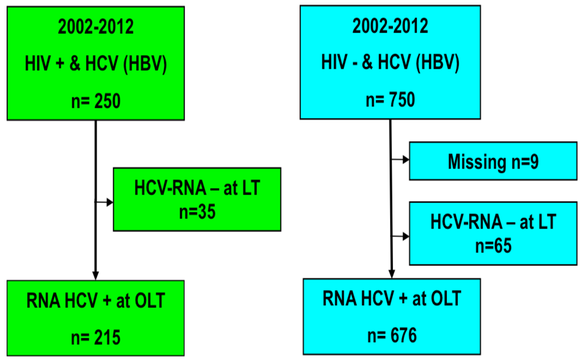

Table 1. Pre-LT recipient characteristics

	HCV/HIV N = 215	HCV N = 676
Matching variables:		
- Age (yrs)	45 (42-48)	49 (45-54)*
- Male gender	172 (80%)	531 (79%)
- HBV co-infection	16 (7.4%)	9 (1.3%)*
Other pre-LT variables:		
- Pre-OLT MELD score	15 (12-20)	15 (11-19)
- HCV genotype 1	119 (56%)	489 (72%)*
- HCV genotype 2 or 3	52 (24%)	89 (13%)*
- HCV genotype 4	36 (17%)	36 (5%)*

*P<0.05

Table 2. Donor Characteristics & Outcomes

	HCV/HIV N = 215	HCV N = 676
Donor characteristics:		
- Donor age >60 yrs	34%	NA
- Donor brain death by trauma	19%	NA
Blood units at LT surgery >3	52%	52%
Median (IQR) follow-up, yr	2.5 (1-4)	3.8 (1.8-6)*
Post LT Anti-HCV treatment	103 (48%)	320 (48%)
- SVR	23 (22%)	88 (34%)*
Outcomes		
- Re-LT	14 (6.5%)	50 (7.4%)
- Death	**91 (42%)**	**219 (32%)***

*P<0.05

Figure 2. Overall post-LT Survival

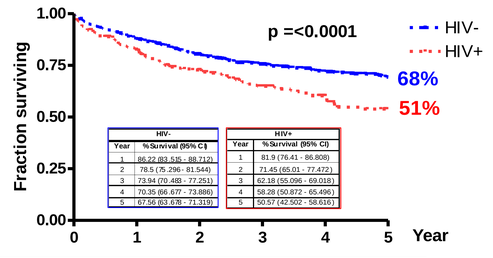

HIV+	215	166	126	93	65	45
HIV-	676	578	493	401	232	246

Figure 3. Post-LT HCV Genotype 1 Survival

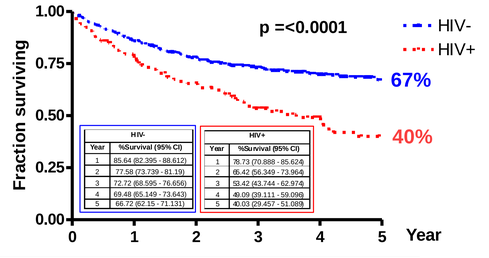

HIV+	119	89	65	43	29	19
HIV-	489	414	354	288	235	175

No significant differences in 5-year survival were observed between HIV/HCV co-infected and HCV-monoifected individuals by the log-rank test for genotypes 2&3 (69% vs. 77%, p= 0.1718) and genotype 4 (53% vs 68%, p= 0.4192)

Table 3. Predictors of post-LT mortality in HIV/HCV + recipients: Multivariate analysis

	p value	Hazard ratio (95% CI)
HCV genotype 1	0.007	1.94 (1.19-3.14)
MELD (per unit increase)	0.039	1.14 (1.00-1.07)
Site LT HIV+ volume (>10 LT)	0.025	0.58 (0.37-0.94)
Plasma HCV RNA >400,000 units	0.038	1.62 (1.03-2.57)
Plasma HIV RNA <200 copies/mL	0.023	0.47 (0.24-0.90)

Figure 4. Overall post-LT Survival for patients with HCV RNA-negative at LT

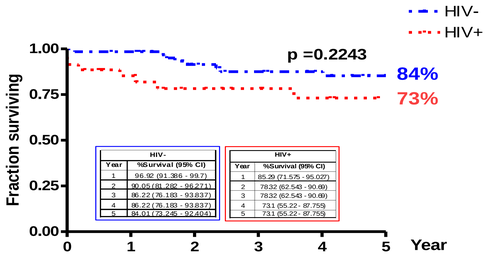

HIV+	35	26	20	17	14	11
HIV-	65	62	49	43	39	33

Conclusions

- Survival in HCV/HIV coinfected LT recipients differs according to the HCV genotype:
  - For genotype 1 was poor and below 50% (40% vs. 68%).
  - For non-1 genotypes survival is similar to HCV-monoinfected recipients.
- LT does not seem to be a valid option for HIV/HCV coinfected patients with genotype 1. However, as the field of anti-HCV Rx is rapidly evolving these patients should not be excluded from LT because new DAA, especially in interferon-free regimens, seem to be a very promising option owing to their better efficacy and tolerance.
- Pre-LT variables can help us to improve LT candidate selection.
- The post-LT management in HCV/HIV coinfected recipients is very complex and this fact can explain the "site" effect on mortality, suggesting that LT in HCV/HIV coinfected patients should be only done in selected sites.
- Survival in HIV-infected LT recipients with HCV RNA negative before LT increased significantly, reaching a rate not substantially different from that of monoinfected patients.

AKNOWLEGEMENTS
ALL PARTICIPATING CENTERS
INSTITUTIONS: FIPSE/MSSSI; GESIDA/SEIMC; Fundación SEIMC-GESIDA; GESITRA/SEIMC SET/SETH/SEN/SEC; Secretaria del Plan Nacional del Sida; Organización Nacional de Trasplante (ONT); NGOs.
The CROI 2014 Organization for the Young Investigator Award to Dr. Christian Manzardo.
ALL STUDY PARTICIPANTS